DUCTSOX®
Fabric Air Dispersion Products

Installation Guide
3x1 and 4x2 U-Track

Thank you for selecting a DuctSox System. This guide will be helpful for installing a 3x1 and 4x2 DuctSox System with U-Track suspension. Sections of fabric will be labeled, assembled, bagged, and boxed for shipping. More complicated systems will include a CAD detail of the system identifying what is in each package.

Overview

Inventory
The first step on any installation project is to read through this guide thoroughly and review the components that need to be installed. The best way to do this is to review the drawings of the project while reading the guide, including the CAD detail if applicable.

Shipping/Receiving
In some cases the DuctSox support system is delivered to the job site ahead of the DuctSox fabric sections. Depending on the size of a project or order, a DuctSox system will be shipped by common courier in a single brown box or several boxes. Larger orders will be shipped in crates by a common freight courier. Each DuctSox length should be packaged into individual plastic bags and labeled according to size and number of pieces. Other markings or labeling may also be incorporated for larger or more complicated systems. Be sure you have determined all boxes are accounted for.

Unpacking
Inspect shipment carefully and make sure all pieces are accounted for. Account for everything by emptying the box and examining all contents. Note any missing or damaged pieces listed on the Bill of Lading.

Labeling
Each DuctSox section will be marked with the size and section number either inside the belt of the inlet or on a tag inside the DuctSox near the zipper. The marking shall be the diameter, section length and total length. If custom labeling has been used, locate an identification sheet that will be included with the delivery.

Equipment Required:
- Drill and #2 magnetic Phillips head drill bit
- Level
- #2 Phillips screwdriver
- Tape measure
- Marker or pencil
- Wrenches for cable-to-track connection (7/16” and 7/32” or pliers)
- Flat (standard) screwdriver
- Cable cutter

Component Details

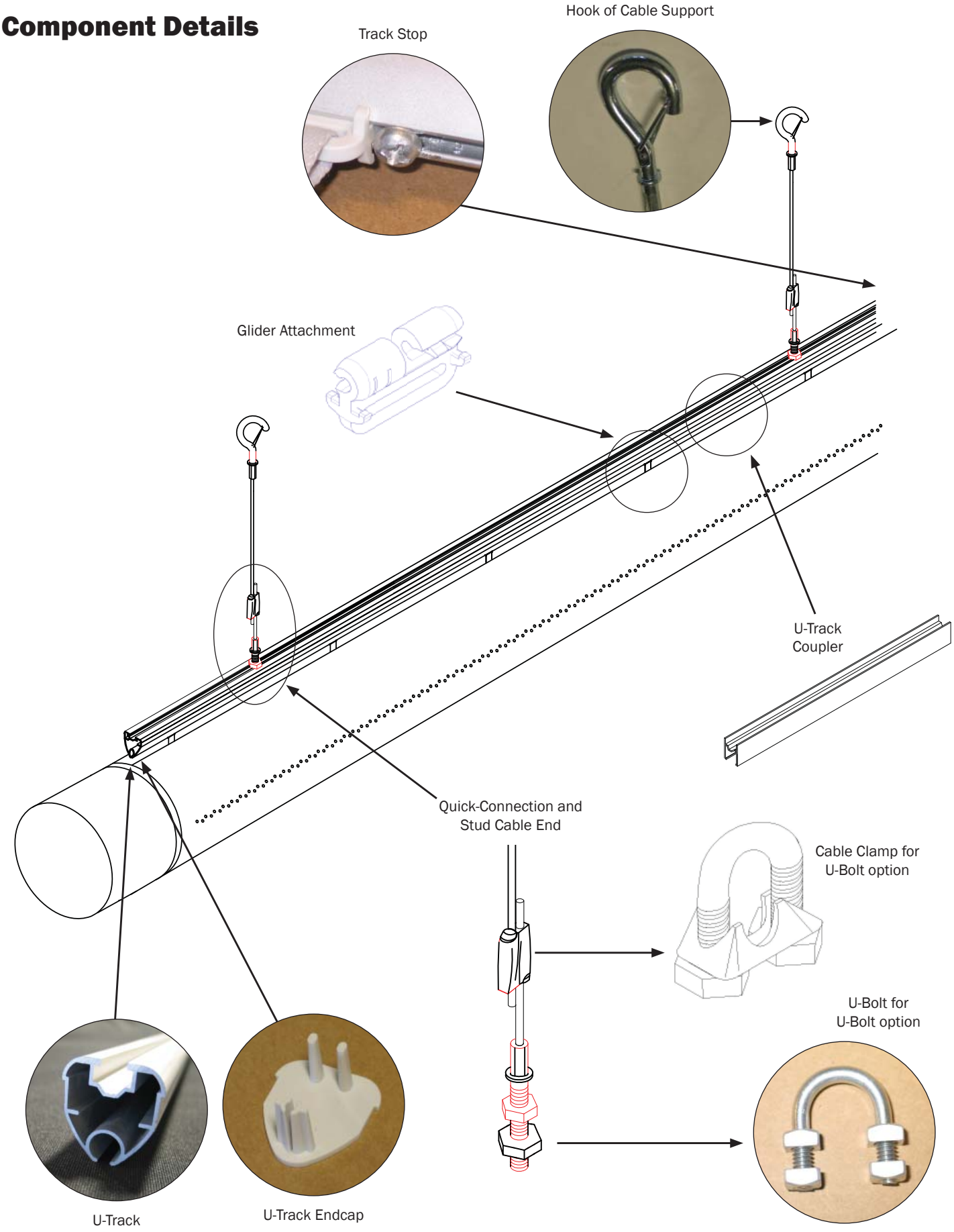

Component Details (continued)

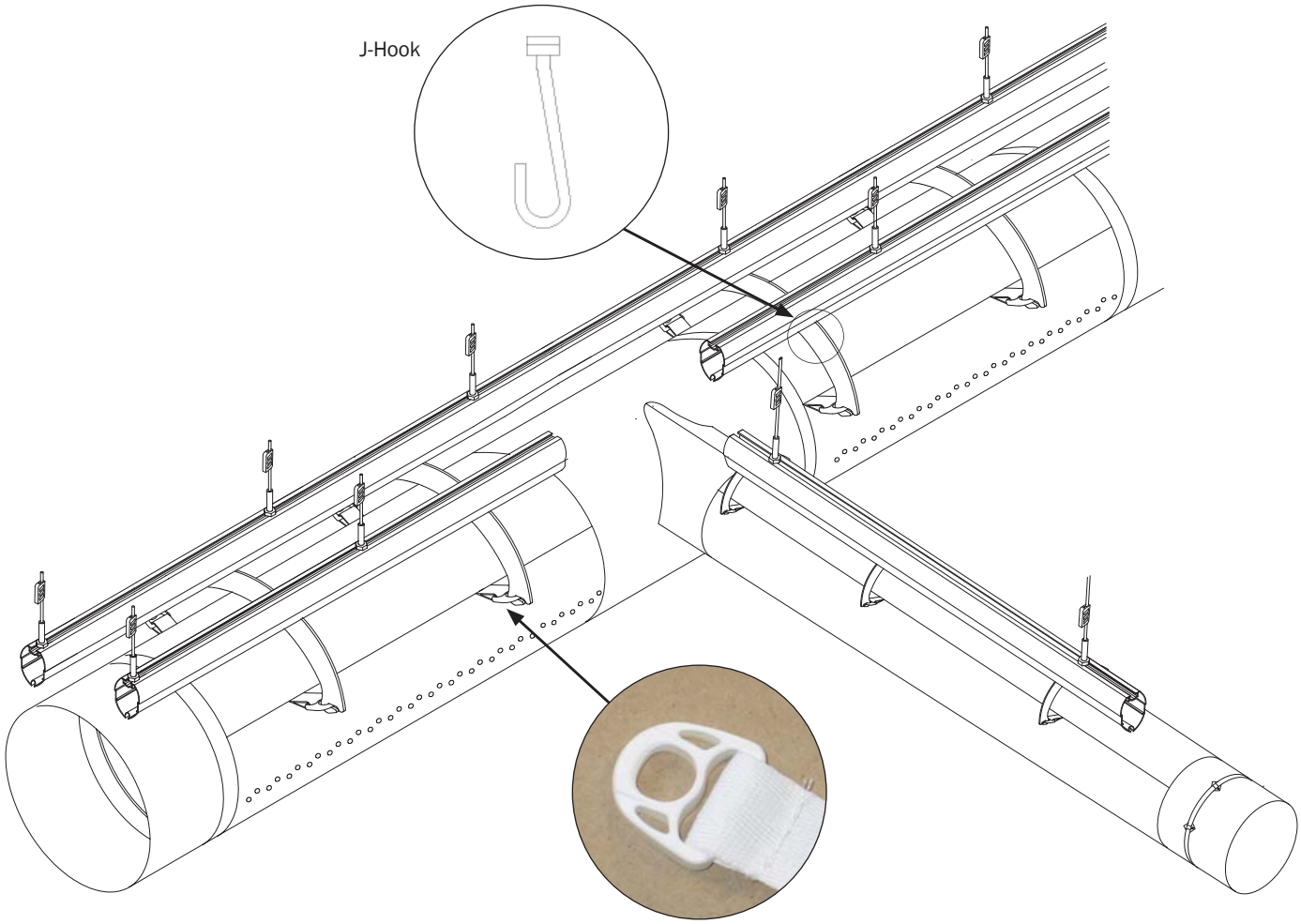

3x1 Sizing Reference Table

DuctSox Diameter	Hanger Width
10” to 12” (254-304mm)	14 5/8” (372mm)
14” to 16” (355-405mm)	18 1/8” (460mm)
18” to 20” (458-508mm)	21 1/2” (546mm)
22” to 24” (558-608mm)	25 1/8” (638mm)
26” to 28” (660-710mm)	28 3/8” (720mm)
30” to 32” (762-812mm)	31 7/8” (810mm)
34” to 36” (863-913mm)	35 3/8” (898mm)
38” to 40” (965-1015mm)	39” (990mm)
42” to 44” (1066-1116mm)	42 1/2” (1080mm)
46” to 48” (1168-1218mm)	46” (1168mm)

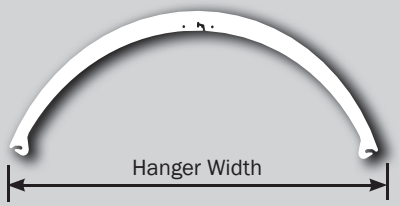

4x2 Sizing Reference Table

DuctSox Diameter	A (distance between each track)	Hanger Width
50” to 52” (1270-1320mm)	19 5/8” (498mm)	49 3/8” (1254mm)
54” to 56” (1371-1421mm)	20 3/8” (517mm)	52 7/8” (1343mm)
58” to 60” (1473-1523mm)	21” (533mm)	56 3/8” (1431mm)

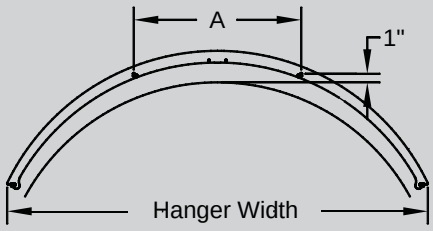

Installation Steps

1. Review materials in box, including the CAD drawing and installed location of the DuctSox
2. Prepare metal inlet collar for fabric connection
3. Mark placement of track. (3x1 or 4x2)
   Install track (with couplers and track supports OR surface mount clips)
4. Install and assemble DuctSox components
5. Start up AHU
6. Balance airflow

Step 1

Review materials in box, including the CAD drawing and installed location of the DuctSox. READ INSTRUCTIONS THOROUGHLY BEFORE BEGINNING.

Step 2

Prepare metal inlet collar for fabric connection.

- Confirm inlet air supply location.
- Confirm inlet air supply size.
- DuctSox inlets are manufactured 1/2" (12mm) larger than specified to fit over metal inlet collar.
- Metal collar length should be 6"–10" (150 to 250cm) for secure fabric attachment.
- Edge Guard (provided) should be installed on the edge of the metal collar to reduce fabric wear from the metal edge.

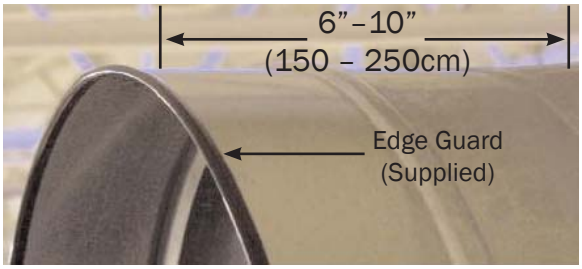

Step 3

Mark Placement of Track. Step 3 is broken into two types of suspension styles: 3x1 and 4x2 One job may use multiple styles.

Step 3 – 3x1 Style

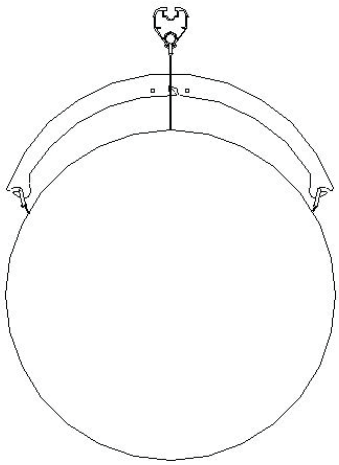

Step 3 – 4x2 Style

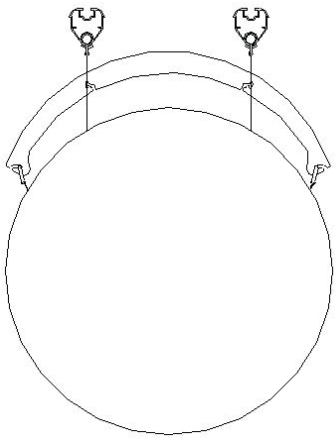

The following three details (Track and Internal Couplers, Track Supports, and End Caps) are used for ALL styles.

Track and Internal Coupler

Track sections are shipped in 8 ft (2440mm) standard lengths.

Coupler assembly consists of a 12" (305mm) long coupler and 4 self-drilling screws as pictured.

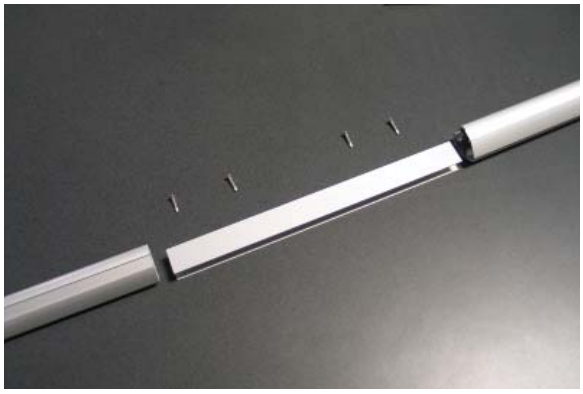

Coupler is inserted into one track about 6" (150mm) and secured with two screws. Screws are driven through the top of the track to secure coupler and track in place. Note: Use screws supplied.

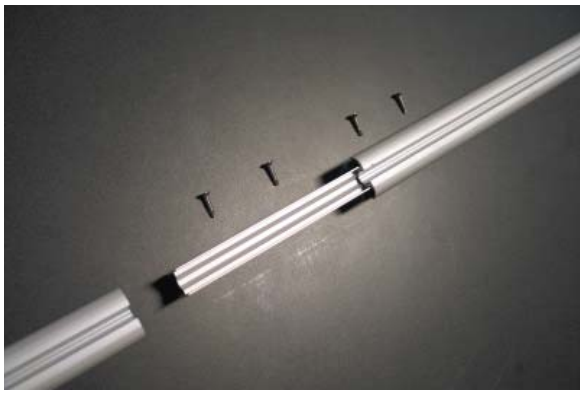

Insert the rest of the coupler into the other track. Be sure to get each section of track as close together as possible so that the coupler is not visible. Secure the coupler in the tracks with two screws for each track.

Track supports: Quick-connection or U-Bolt

The Track Supports are the main structural support between the U-track & DuctSox and the structure of the building. A Quick-Connection Track Support OR a U-Bolt Track Support are the available options.

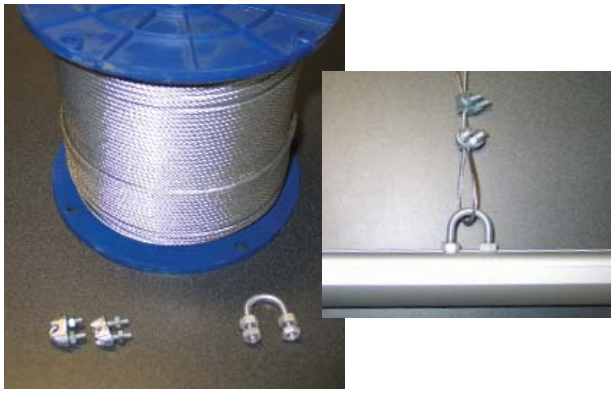

Quick-Connection Track Support Option

Hook end is attached to structure above the DuctSox. DO NOT loop the hook back onto the cable, this could cause the hook to detach. Hook must be hooked into part of the building structure, for example an eyebolt attached to the ceiling. Nut on the end of the stud is permanently fixed and is not adjustable. This nut is slid into the top channel of the track. After stud and cable are in their proper location the top nut (7/16”wrench) on the stud must be tightened onto the track while holding the stud with a pliers. After adjusting the track height trim excess cable as needed.

U-Bolt Track Support Option

A roll of cable, U-bolts, square nuts for U-bolts, regular nuts for U-bolts and cable clamps are supplied. Length from the ceiling support and the top of the track needs to be determined by installer. A cable loop is created at the top of the cable length by a cable clamp. Be sure the installed cable does not contact any sharp edges; for example, loop the cable through an eyebolt attached to the ceiling. Be sure all of the threads of the square nuts are engaged to the U-bolt. The square nuts on the end of the U-bolt are slid into the top channel of the track. After U-bolt and cable are in their proper location the nuts (7/16”wrench) on the U-bolts must be tightened onto the track. A cable loop is created at the top of the track by the cable through the U-bolt clamp. After adjusting the track height trim excess cable as needed.

NOTE for both supports: Placing track at the proper elevation (this could be an angle for a sloped ceiling) and straightness is critical for a good installation.

Endcap

A U-track Endcap gives the U-track a nice finished look on cut ends. Endcap is friction-fit and simply needs to be pressed into place. A sheet metal screw should be used to hold the endcap in place.

Step 3 - 3x1 Style

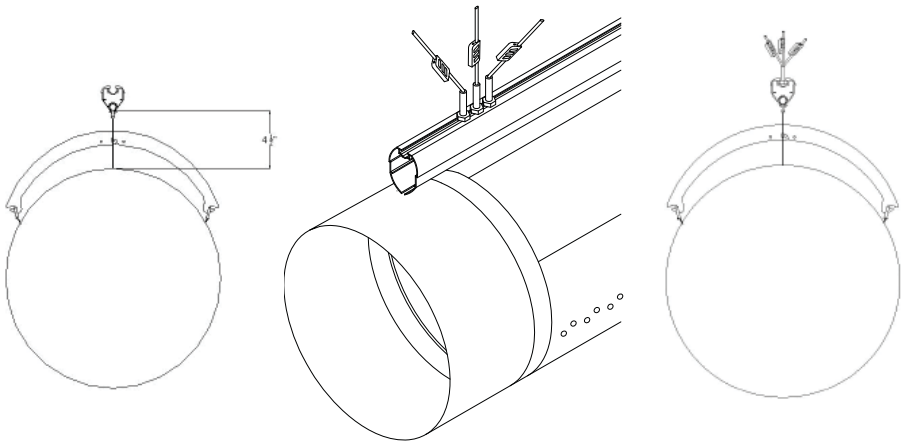

Determine placement of track (both track path and elevation). The bottom of the U-Track must be mounted 4.5" (115mm) above the 12:00 location of the DuctSox. Track supports are spaced between 5 to 8 ft (1524 to 2440mm) apart with a maximum of 8 ft (2440mm). Additional Track Supports must also be mounted at both ends of continuous track runs for stabilization (or as an alternative, the track can be secured by mounting the ends with threaded rod). The track support cable will need to be mounted at angles away from the sides of the track along with angled cables in-line with the track. See image above.

T's

There should be roughly 12" (305mm) from sidewall of DuctSox to the start of the branch track. Track too close to the main run may cause premature failure due to abrasion from the track. Support around fabric fittings may require additional track supports. NOTE: Offset distance of branch U-Track from main trunk is approximately half of the main trunk diameter plus 12" (305mm).

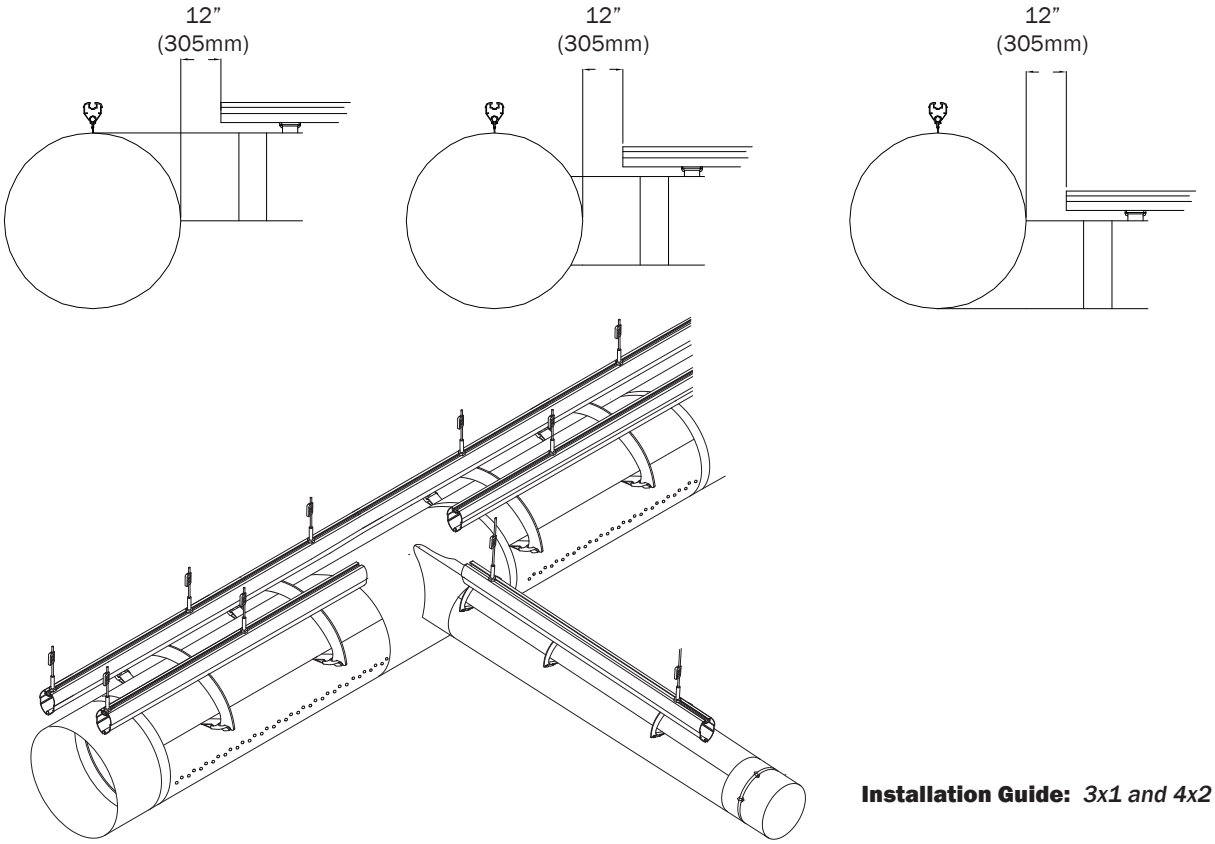

Elbows
Radius track is manufactured at the same radius of the DuctSox, this is typically 1.5 times the diameter of the DuctSox. For example, a 24” diameter DuctSox would have a radius track with a radius of 36”.

(24” x 1.5 = 36”)

Install at least one Track Support per radius section; in the center if possible.

Coupler will not go into radius track the full 6” (and it shouldn’t). Coupler must only be inserted into radius track 1.5”. This connection will only use one screw in the radius track portion. There will be 3” radius couplers when splicing radius-to-radius connections.)

Radius track will only work with DuctSox that are installed in a true horizontal plane (Figure A).

Vertical elbows are supported by D-ring straps rather than radius track (Figure B).

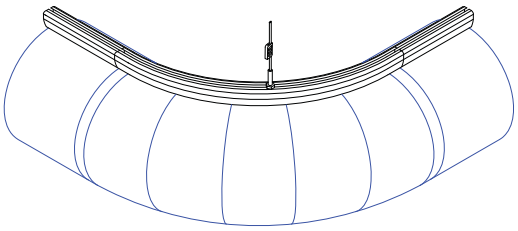

Figure A

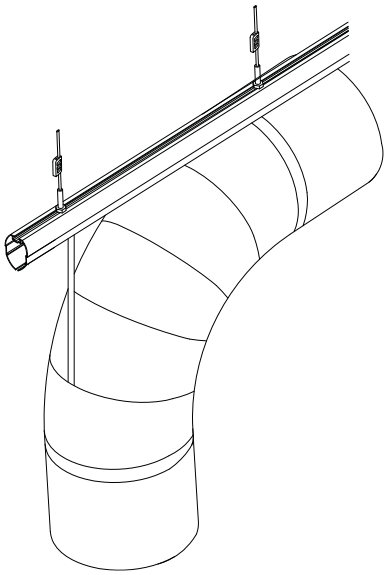

Figure B

Surface Mount Hanging Option
U-Track in the 1-row style can be installed to a ceiling surface by multiple options.

Surface Mount Clip: A specially designed clip that snaps to the top of the U-Track. This clip can be mounted straight to the ceiling. After mounting to the ceiling the U-Track can be pushed up into the clip and fastened in place. U-Track should be supported every 4 to 6 ft (1220 to 1830mm) when used in the Surface Mount Hanging option.

Optional T-Bar Clip: A T-Bar clip is riveted (by installing contractor) to the Surface Mount clip. The U-Track is snapped to the Surface Mount clip and the bottom of the T-Bar ceiling support.

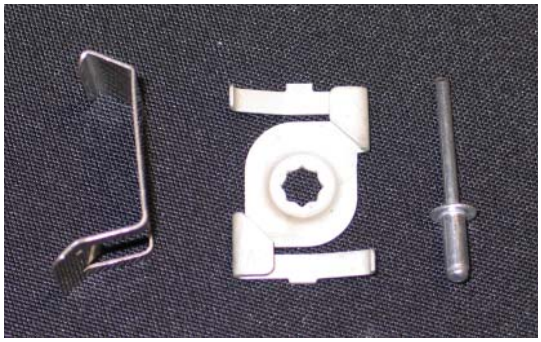

Step 3 – 4x2 Style

Determine placement of track (both track path and elevation). The bottom of the U-Track must be mounted "A" inches apart and 2 $^{1}/_{2}$ inches above the top of the DuctSox (match this up to the chart and the drawing). Track supports are spaced between 5 to 8 ft (1524 to 2440mm) apart with a maximum of 8 ft (2440mm). Additional Track Supports must also be mounted at both ends of continuous track runs for stabilization (or as an alternative, the track can be secured by mounting the ends with threaded rod). The track support cable will need to be mounted at angles away from the sides of the track along with angled cables in-line with the track. See image below.

4x2 Sizing Reference Table

DuctSox Diameter	A (distance between each track)	Hanger Width
50" to 52" (1270-1320mm)	19 5/8" (498mm)	49 3/8" (1254mm)
54" to 56" (1371-1421mm)	20 3/8" (517mm)	52 7/8" (1343mm)
58" to 60" (1473-1523mm)	21" (533mm)	56 3/8" (1431mm)

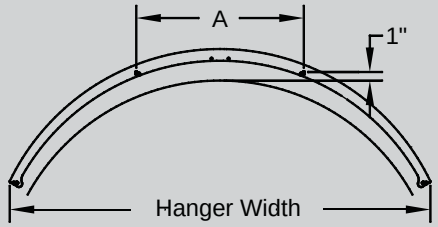

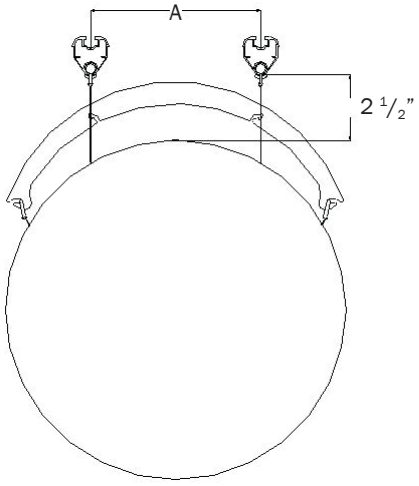

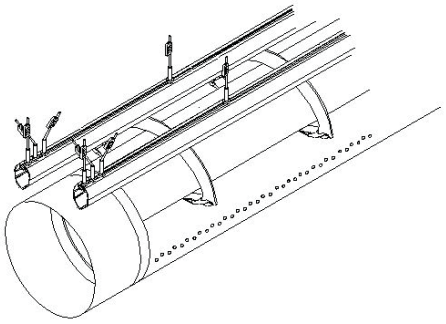

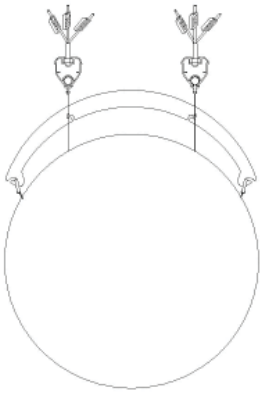

T's

There should be roughly 12" (305mm) from sidewall of DuctSox to start of the branch track. Track too close to the main run may cause premature failure due to abrasion from the track.

Support around fabric fittings may require additional track supports.

NOTE: Offset distance of branch U-Track from main trunk is approximately half of the main trunk diameter plus 12" (305mm).

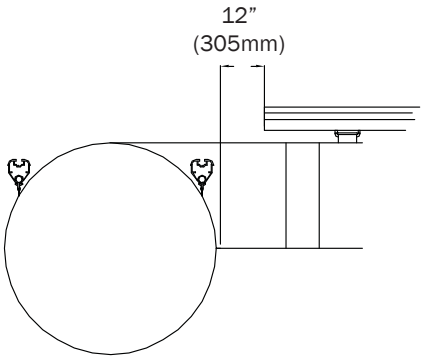

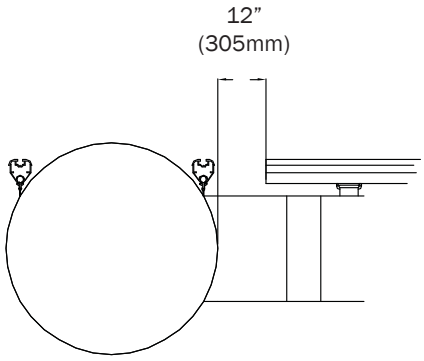

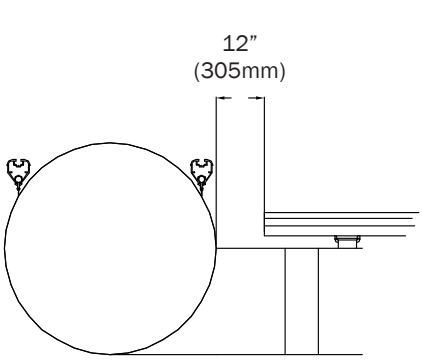

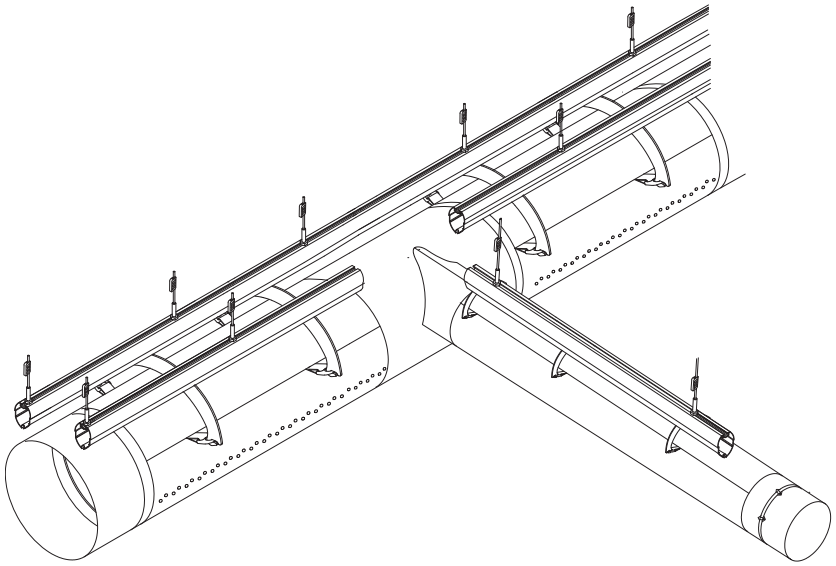

Elbows
Radius tracks are manufactured to match the radius of the DuctSox. This is typically 1.5 times the diameter of the DuctSox. For example, the inside radius track of a 24” diameter DuctSox would have a radius of 25.6”.

24” x 1.07 = 25.6
((24” x 1.5) - (24”/2 x .866) = 25.6”)

And the outside radius track of a 24” diameter DuctSox would have a radius of 46.4”.

24” x 1.93 = 46.4”
((24” x 1.5) + (24”/2 x .866) = 46.4”)

Install at least one support per radius section, in the center if possible.

Coupler will not go into radius track the full 6” (and it shouldn’t). Coupler must only be inserted into radius track 1.5”(this connection will only use one screw in the radius track portion. There will be 3” radius couplers when splicing radius-to-radius connections.)

Radius track will only work with DuctSox that are installed in a true horizontal plane (Figure A).

Vertical elbows are supported by D-ring straps rather than radius track (Figure B).

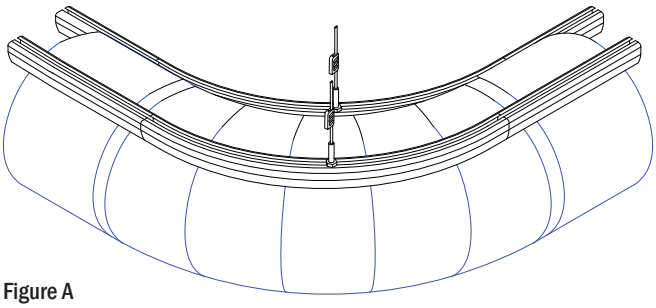

Figure A

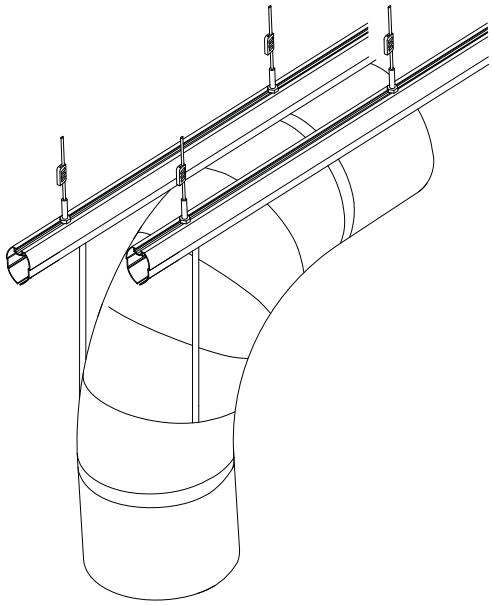

Figure B

Step 4

Install DuctSox Fabric.

DuctSox Inlet must be attached to the metal collar using screws (not included) through plastic patches on the Inlet Belt. Be sure to locate the zipper start and seam at the 12:00 orientation for proper alignment.

Hangers must be connected to the J-Hooks before sliding them into the U-Track. J-Hooks and hangers are only attachable and detachable from each other when they are NOT installed on the U-Track. See the hanger connection figure found below. Slide Glider attachments and J-Hooks (these are installed in an alternating pattern) of the DuctSox into the U-track bottom channel. Unzip fittings and slide them in place independently of the straight sections. Close all zipper connections before moving to Step 5.

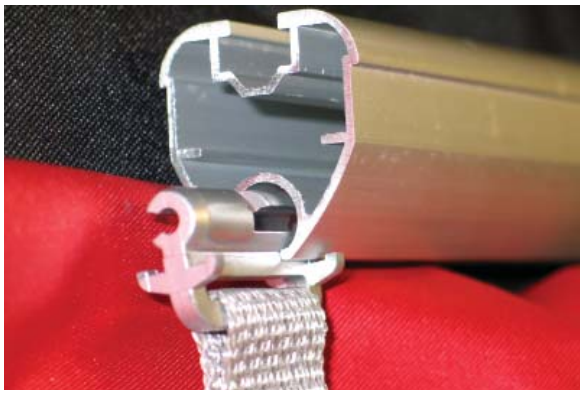

J-Hook Connection

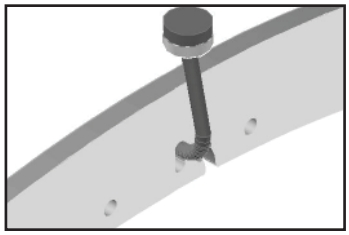

Insert J-hook into upper portion of hanger slot. (Insert J-hook upside down and spin up.)

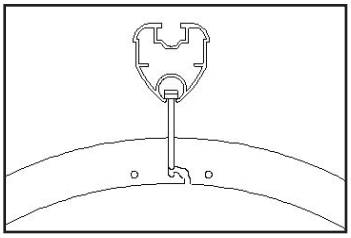

Insert hanger and J-hook into lower portion of H-track.

D-Clasp Connection

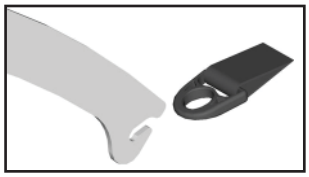

Locate D-Clasp on Fabric.

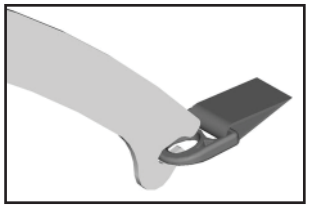

Insert into slot on hanger end.

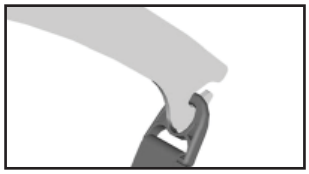

Lock D-Clasp into end by rotating down.

Step 5

Start Up AHU. Turn on the AHU and inflate the DuctSox System. Check all Gliders and sections to ensure system is inflating properly. If required, move Gliders to eliminate puckering at binding locations. If lengths do not fit properly, double check all field measurements and compare to drawings. If all measurements are correct, contact your DuctSox factory rep to discuss options. Once system is properly adjusted, inflate the system, pull the last Glider in each straight section (including straight sections between fittings), and secure tension using Track Stop Screws. Also, be sure to install a Track Stop Screw into the U-Track at the Endcap Glider, at the Inlet Glider, and at each Glider immediately adjacent to all fittings.

Track Stop Screw

The Track Stop Screw is used to keep sections of DuctSox from moving lengthwise in the U-track. They also are used to put a slight tension on straight sections of DuctSox (straight sections may consist of more than one zippered section of DuctSox). The screw is tightened into the bottom channel to lock the stop at locations where Gliders are to be locked in place.

If the system includes elbows or T's, secure Gliders before and after these fittings. Failure to install DuctSox Systems correctly may void warranty.

Step 6

Air Balancing. System must be balanced to design CFM and static pressure immediately after installation. Most DuctSox Systems include a zipper at the inlet location for easy access to monitor flow.

If the fabric is fluttering after balancing, please contact your factory rep immediately. Solutions to the fluttering include adjusting the Adjustable Flow Device (AFD), adding AFDs, or other solutions that would result in a less turbulent airflow.

Laundering Instructions

Sedona-Xm, TufTex, Verona, DuraTex, Microbe-X, Rx, and Stat-X fabrics:

- Remove the DuctSox fabric from your system, being sure to unzip all sections. Take care in recording where each section was installed.
- Turn soiled side out, soak in cold water for 30 minutes.
- Wash cold, gentle cycle.
- Rinse thoroughly (repeat cycle if water/DuctSox still soiled).
- Drip dry or no-heat tumble dry.

? If any questions arise regarding the installation of your 3x1 or 4x2 U-Track System, contact us.

866-382-8769 or 563-588-5300

DUCTSOX®
Fabric Air Dispersion Products
9866 Kapp Court ■ Peosta, IA 52068
Ph: 866-382-8769 or 563-588-5300 ■ Fax: 563-588-5330
www.ductsox.com

© 2011 DuctSox Corp.
DS3x14x2UTRKIG0911A